BanNerman

BA-402-K

Back Pack Blower

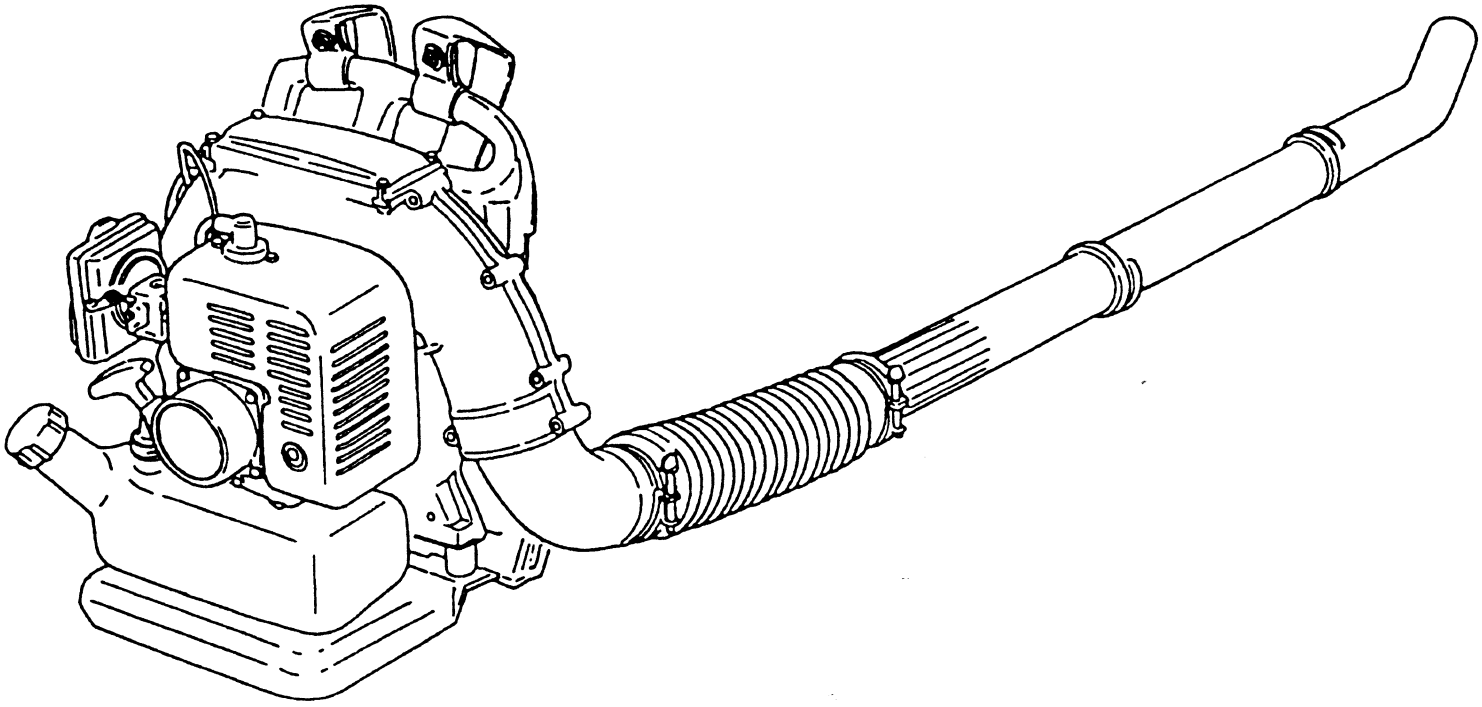

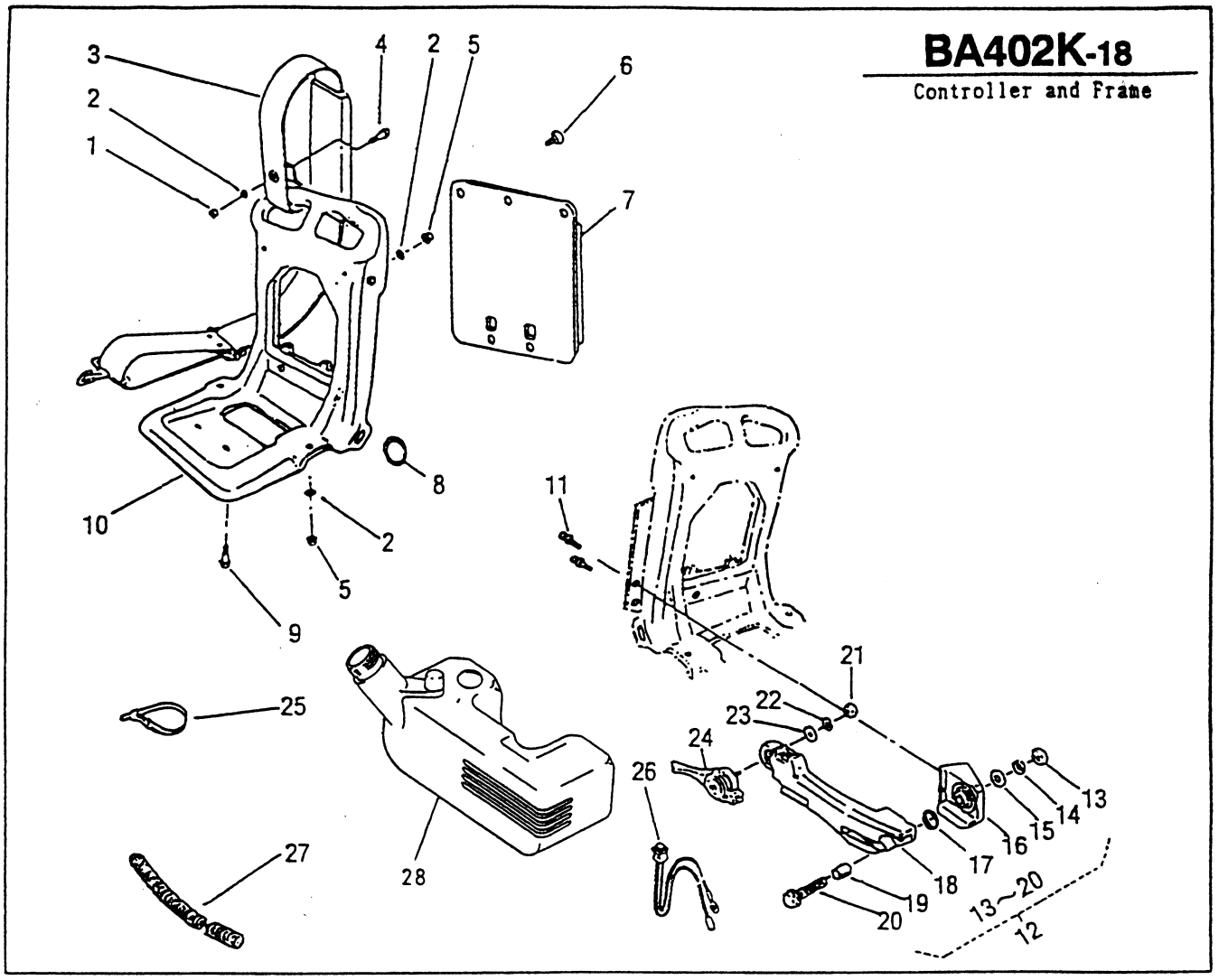

PARTS LIST

MODEL : BA402K-18

(Controller and Frame)

46013-499

Aug. 26. 1998 | 1/1

REF. NO.	PARTS NO.	Q'TY	INCLUDING		
1	569L 0600	2			
2	68036 125	6			
3	36063 155	2			
4	376L 0616	2			
5	561L 0600	4			
6	68027 103	5			
7	91027 116	1			
8	51113 109	2			
9	374L 0612	2			
10	36122 102	1			
11	374L 0512	2			
12	51042 106	1			
13	511L 0800		1		
14	661L 0800		1		
15	612L 0800		1		
16	11113 238		1		
17	211B 2100		1		
18	11113 239		1		
19	61024 137		1		
20	335L 0825		1		

REF. NO.	PARTS NO.	Q'TY	INCLUDING		
21	511L 0500	1			
22	661L 0500	1			
23	613L 0500	1			
24	91010 161	1			
25	68028 102	1			
26	41004 129	1			
27	41003 137	1			
28	36066 113	1			

REF. NO.	PARTS NO.	Q'TY	INCLUDING		

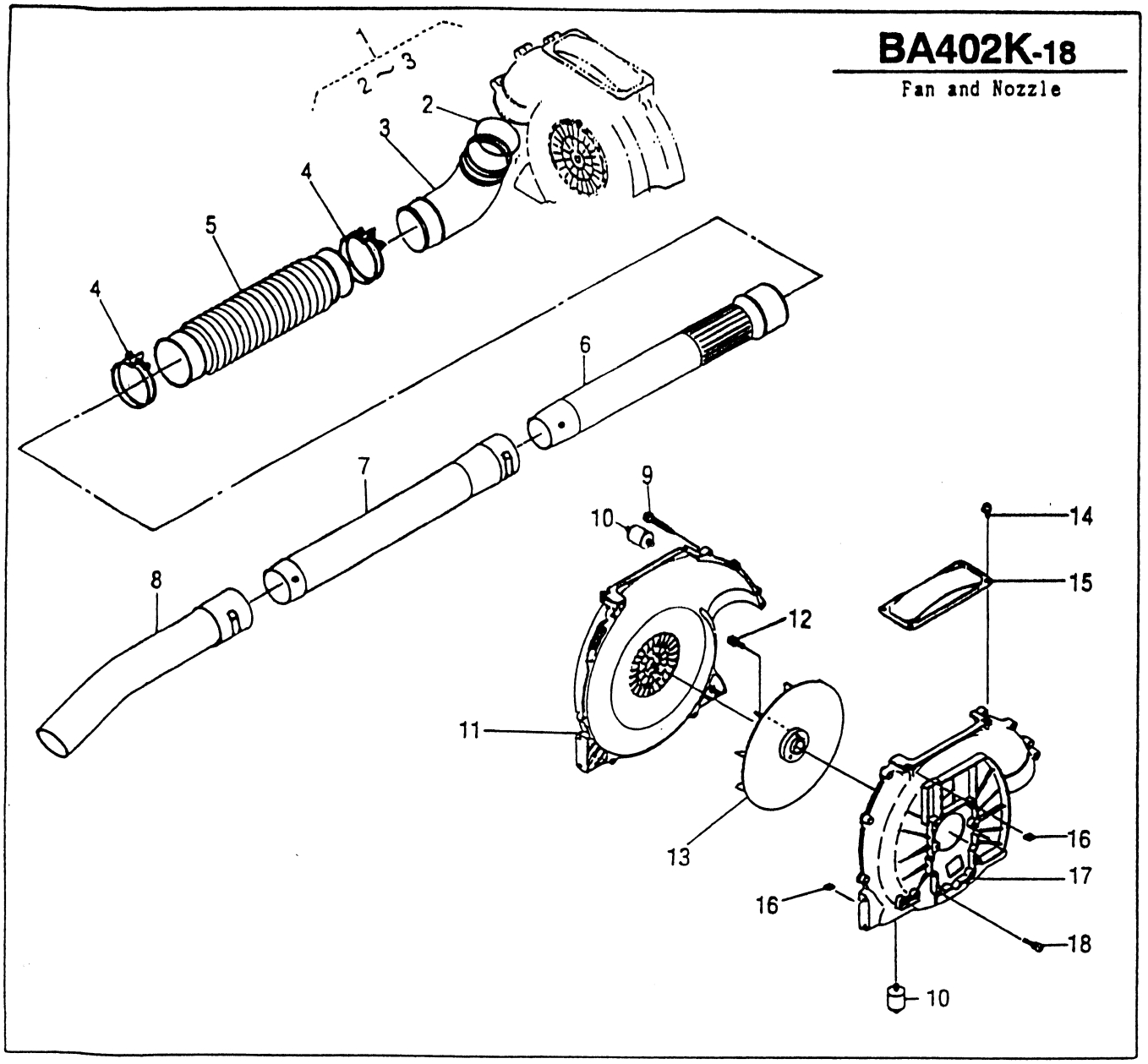

PARTS LIST

MODEL : BA402K-18

(Fan and Nozzle)

46013-499

Aug. 26. 1998 | 1/1

REF. NO.	PARTS NO.	Q'TY	INCLUDING
1	71214 101	1	
2	212B 3000		1
3	36086 102		1
4	68031 120	2	
5	36084 101	1	
6	36087 104	1	
7	36088 106	1	
8	36089 103	1	
9	470L 0530	12	
10	36005 142	4	
11	51123 142	1	
12	31062 146	3	
13	51125 101	1	
14	374L 0620	4	
15	36065 161 47	1	

REF. NO.	PARTS NO.	Q'TY	INCLUDING
16	31058 106	6	
17	51123 138	1	
18	31062 144	4	

REF. NO.	PARTS NO.	Q'TY	INCLUDING